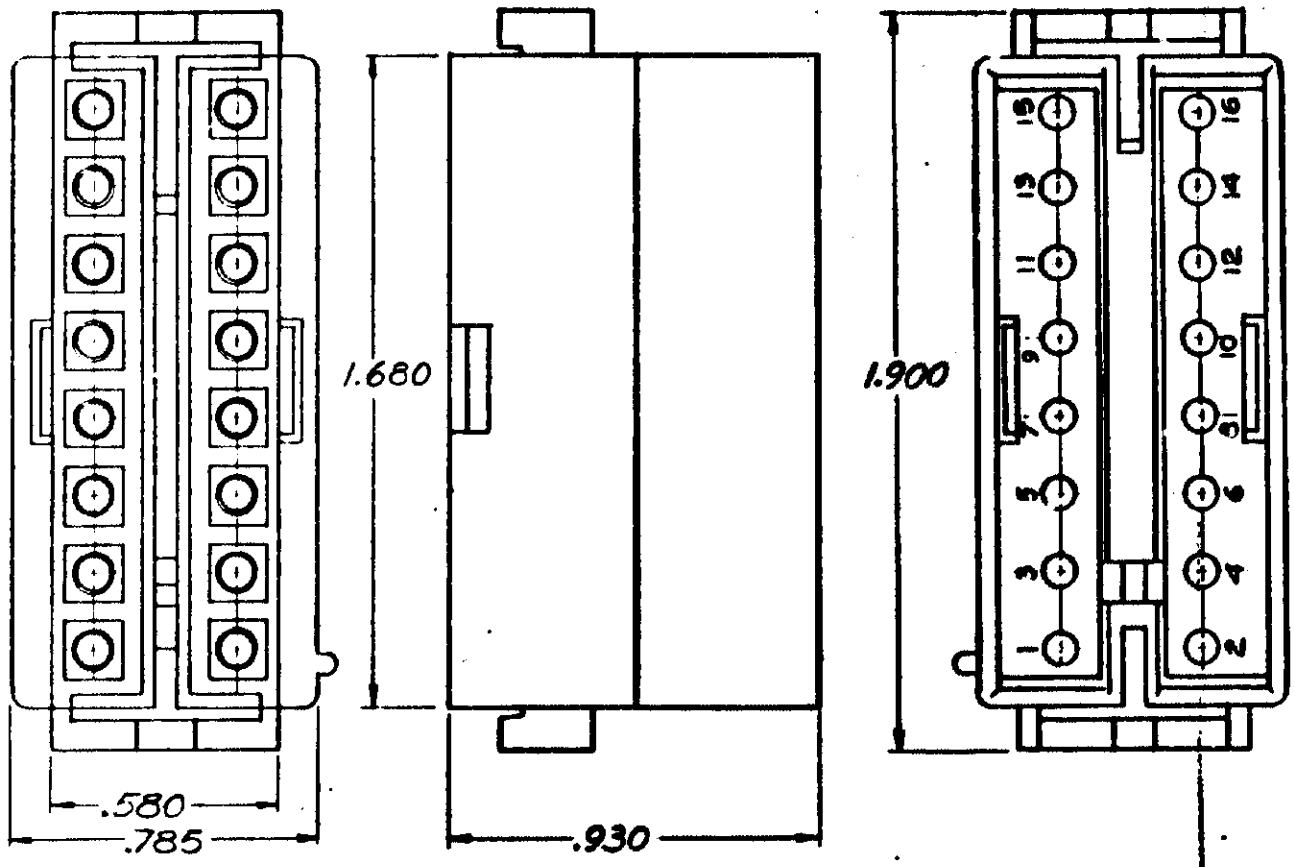


1. TO BE USED WITH MATE-N-LOK PINS.
2. TO BE USED WITH PLUG 480438.

| NUMBER | MATERIAL | COLOR |
|---|---|---|
| 1-480439-0 | NYLON | NATURAL |

Unpublished copy not to be reproduced nor published without written permission of AMP Incorporated

| LTR | REVISION RECORD | DR | CHK | DATE |
|---|---|---|---|---|
| B | OBSOLETED 1-1/1-9 PER CM-473 | PRB | RS | 7/7/86 |
| A1 | RESTORED | CM | RS | 8-5-85 |
| A | ADDED - 1 THRU - 9 P-53124 | JRK | JK | 2/18/63 |
| 0 | RELEASED | JRK | | 7/28/67 |

©1966 BY AMP INCORPORATED. ALL RIGHTS RESERVED. AMP PRODUCTS COVERED BY PATENTS AND/OR PATENTS PENDING.

CUSTOMER COPY REFERENCE ONLY

MATERIAL AND FINISH: SEE TABLE

AMP INCORPORATED HARRISBURG, PENNA

CLASS: .086 PIN HOUSING

TYPE: MOTOR MOUNT

WIRE — RANGE — INSULATION

TOLERANCE EXCEPT AS NOTED ± .015 ± 1°

SCALE: 2x1

LOC: CM A NO: 480439 SHEET 1 OF 2 REV: B

DR: J.R. KUNKLE DE

CHK: 1/24/67 APP: 1/24/67

NAME: 16 CIRCUIT MATE-N-LOK CAP

DIMENSIONS IN INCHES DO NOT SCALE PRINT

1252 REV 7/60

NUMBER 480439

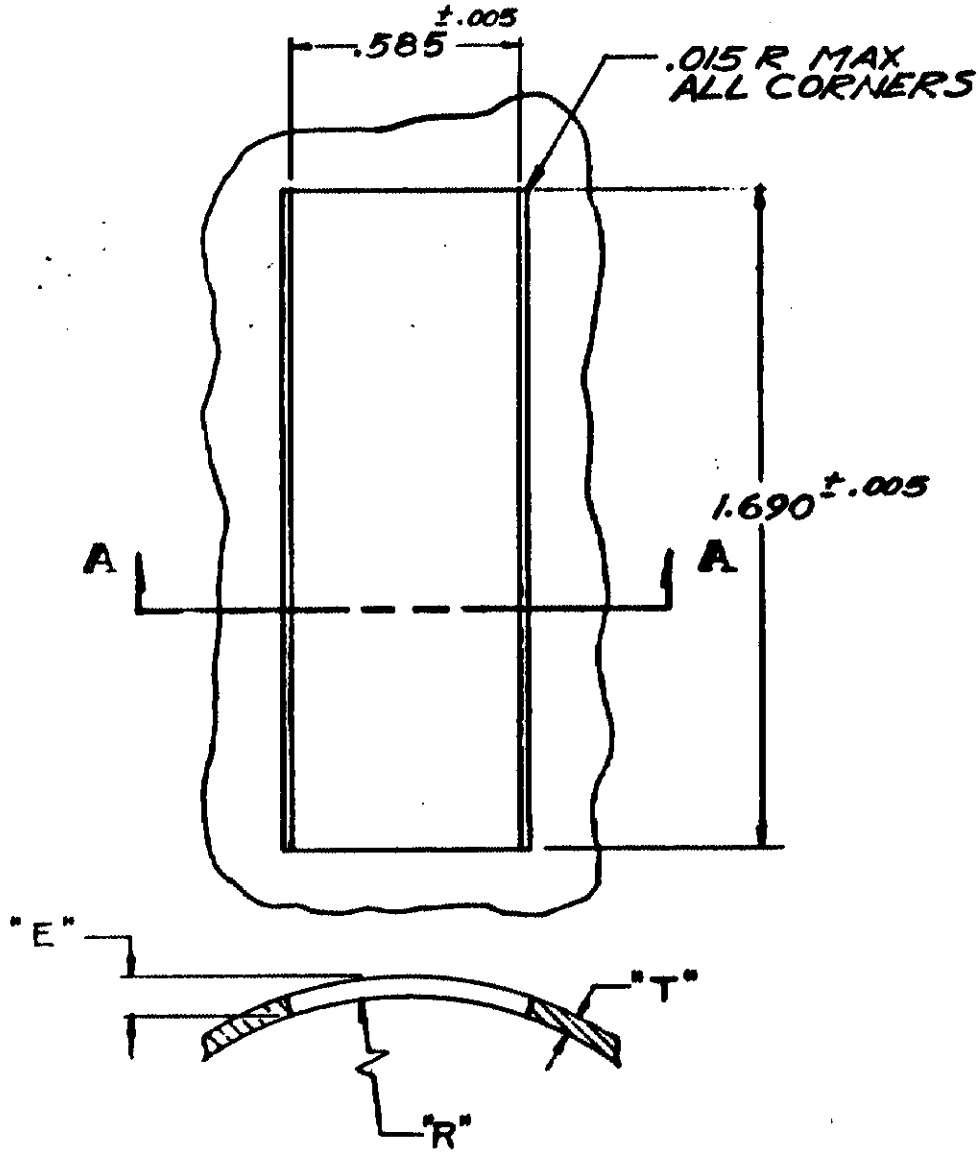


**SEC. A-A**

1. EFFECTIVE PANEL THICKNESS "E" IS .040-.100 AND IS DEPENDENT ON "T" AND "R".
2. CAP MUST BE INSERTED IN A ROCKING MANNER.
3. THE PANEL MUST BE PUNCHED SO THAT THE HOUSING ENTERS THE PANEL IN THE SAME DIRECTION AS THE PUNCH
4. PANEL MUST NOT HAVE ANY MATERIAL (PAINT, PORCELAIN, ETC.) APPLIED IN THE MOUNTING HOLE AREA THAT WOULD DECREASE RETENTION OF THE HOUSING IN THE PANEL.

DIMENSIONS IN INCHES DO NOT SCALE PRINT

| LTR | REVISION RECORD | DR | CHK | DATE |
|---|---|---|---|---|

©1966 BY AMP INCORPORATED. ALL RIGHTS RESERVED. AMP PRODUCTS COVERED BY PATENTS AND/OR PATENTS PENDING.

CUSTOMER COPY REFERENCE ONLY

AMP INCORPORATED HARRISBURG, PENNA

MATERIAL AND FINISH —X—

CLASS —X—

WIRE — RANGE — INSULATION —X— —X—

TYPE —X—

TOLERANCE EXCEPT AS NOTED ± 1° 0'

SCALE 2x1

LOC CM A

NO 480439 SHEET 1 OF 2

REV B

DR J. P. KUHKLE

DE

CK 1/25/67

APP 1/26/67

NAME RECOMMENDED MOUNTING INFORMATION FOR 16 CIRCUIT MATE-N-LOK MOTOR MOUNT CAP

REV 7/60